EXP NO: 1

VERIFICATION OF KIRCHHOFF'S LAWS

AIM:

To verify Kirchhoff's voltage law and Kirchhoff's current law both theoretically and practically for a given DC circuit.

Apparatus Required:-

SL-NO	Apparatus	Specification	Quantity
1.	Regulated power supply (RPS)	(0-30V)	1
2.	Voltmeter	(0-30V) MC	3
3.	Ammeter	(0-10mA) MC	3
4.	Resistor	1KΩ	3
5.	Bread board	–	1

EXPNO:

Circuit Diagram:

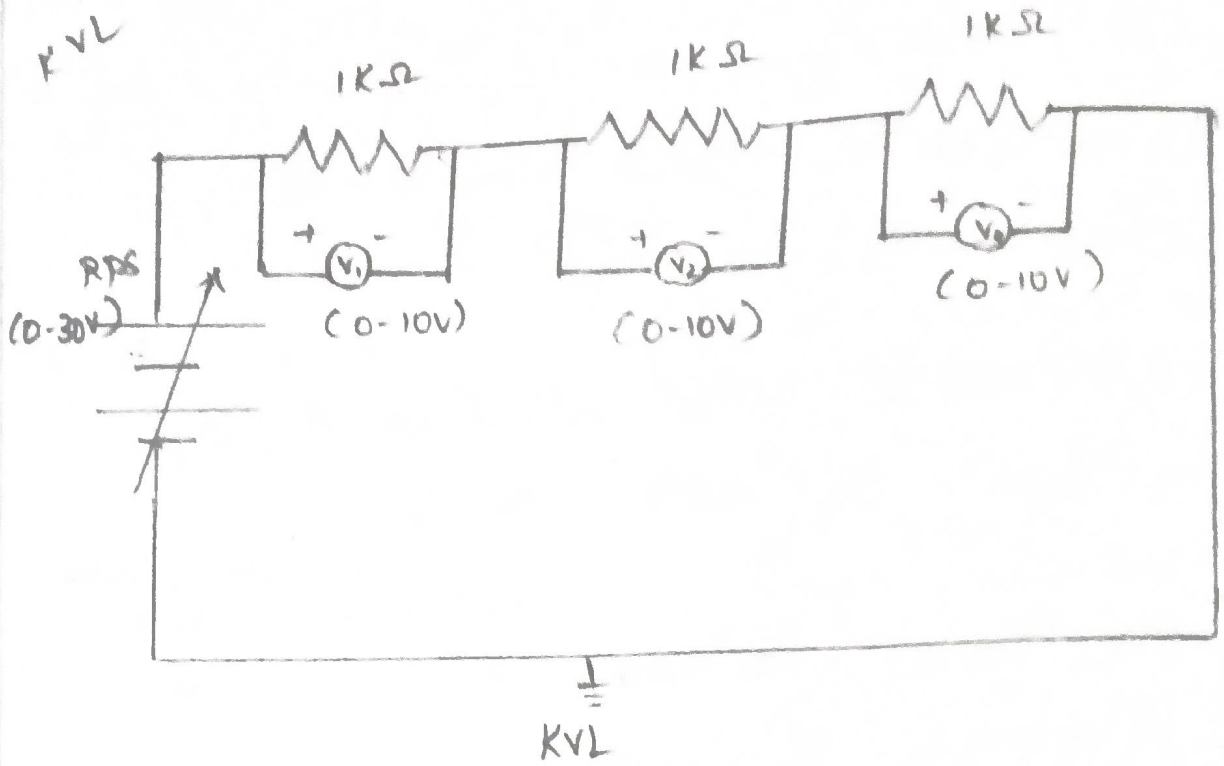

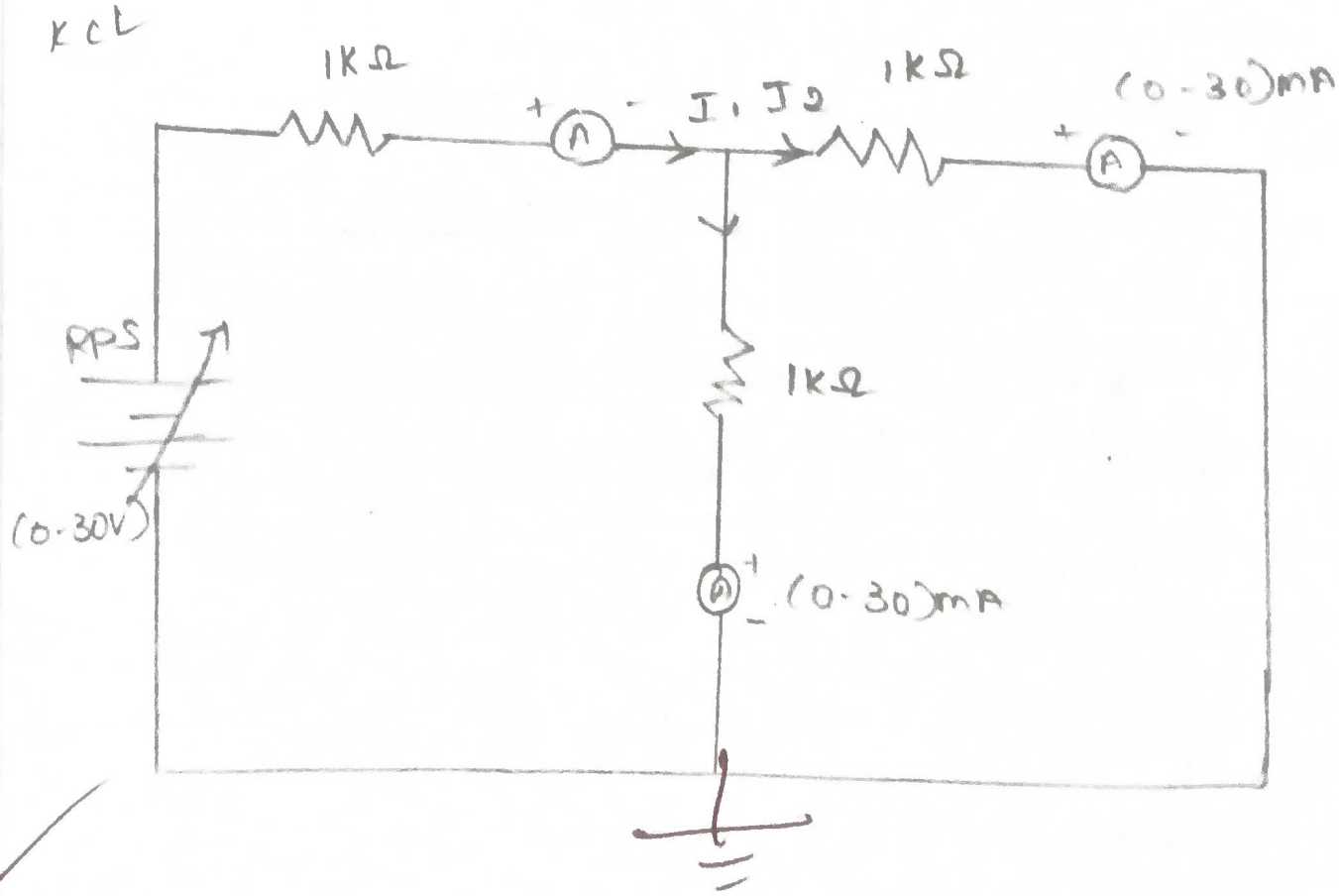

PROCEDURE:

1, Give connections as per the circuit diagram.

2, Switch ON the supply, vary the RPS (Regulated power supply) and set a particular input voltage.

3, Note down the reading of ammeters and voltmeters and tabulate them.

4, vary the RPS for different input voltages and note down the readings of all the meters.

5, Reduce the RPS to its minimum value and switch off the supply.

6, using the tabulated values, verify Kirchoff's law practically, and verify it theoretically.

Tabular column:

V (volts)	V_1	V_2	V_3	$V = V_1 + V_2 + V_3$	I (amps)	I_1	I_2	$I_1 + I_2$ (amps)
15	5.7	5.10	4.95	15.75	9.02	4.50	4.57	9.02
30	10.1	10	10	30.1	10.12	5.05	5.06	10.12
24	8.1	8.1	8	24.2	14.50	7.24	7.25	14.5

O/P verified

4/2/26

Calculations:

(i) pratical verification

* V/I should be constant (ohm's law)
* V should be equal to $(V_1 + V_2 + V_3)$
* I should be equal to $(I_1 + I_2)$

(ii) Theoretical verification

* Kirchoff's voltage law

(i) for V = 15 V

$V_1 = 5.7V$, $V_2 = 5.10$, $V_3 = 4.95$

$V = V_1 + V_2 + V_3$

$= 5.7 + 5.10 + 4.95$

$= 15.75 V$

(ii) $V = 30V$

$V_1 = 10.1$, $V_2 = 10$, $V_3 = 10$

$V = V_1 + V_2 + V_3$

$V = 30.1V$

(iii) $V = 24V$

$V_1 = 8.1$, $V_2 = 8.1$, $V_3 = 8$

$= 24.2V$

Kirchoff's current law:-

(i) $I = 9.02$, $V = 16V$

$I_1 = 4.50$, $I_2 = 4.52$

$I_1 = I_1 + I_2$

$I = 4.50 + 4.52$

$I = 9.02A$

(ii) $I = 10.12$, $V = 18V$

$I_1 = 5.05$, $I_2 = 5.07$

$I_1 = I_1 + I_2$

$I = 10.12A$

(iii) $I = 14.50$, $V = 26V$

$I_1 = 7.24$, $I_2 = 7.26$

$I = I_1 + I_2$

$= 7.24 + 7.26$

$= 14.50 A$

Marks split-up:

S.NO	Description	Marks Allowed	Mark obtained
1,	Experimental Setup / connections	20 Marks	20
2,	observation / Readings	20 Marks	20
3,	Calculation / results	20 Marks	20
4,	viva	20 Marks	20
5,	Record	20 Marks	20

Total : 100

100

11/2/26

RESULT:

Thus Kirchoff's current law and Kirchoff's voltage law are verified ~~par~~ practically and theoretically.